Dimension Drawing - VE BusBars	
VBB115060020	Busbar 150A 6P +PC cover

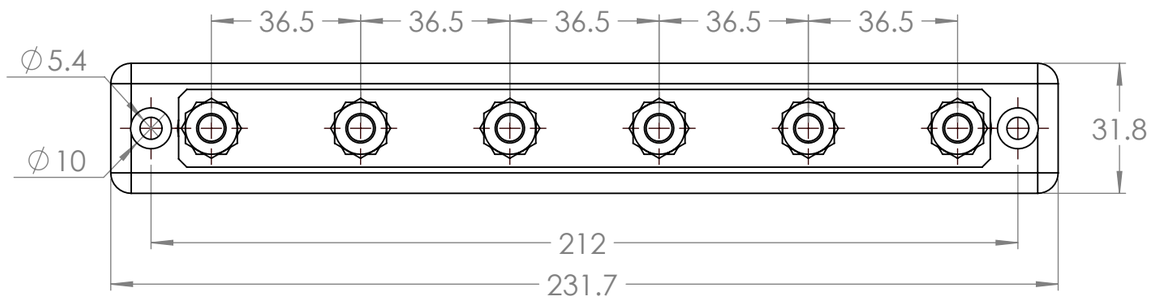

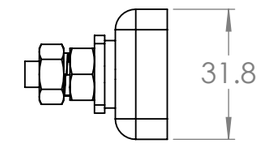

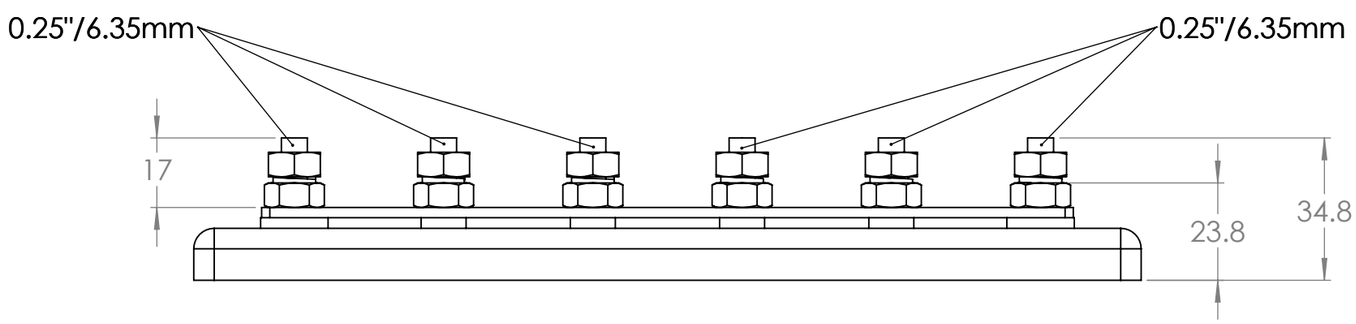

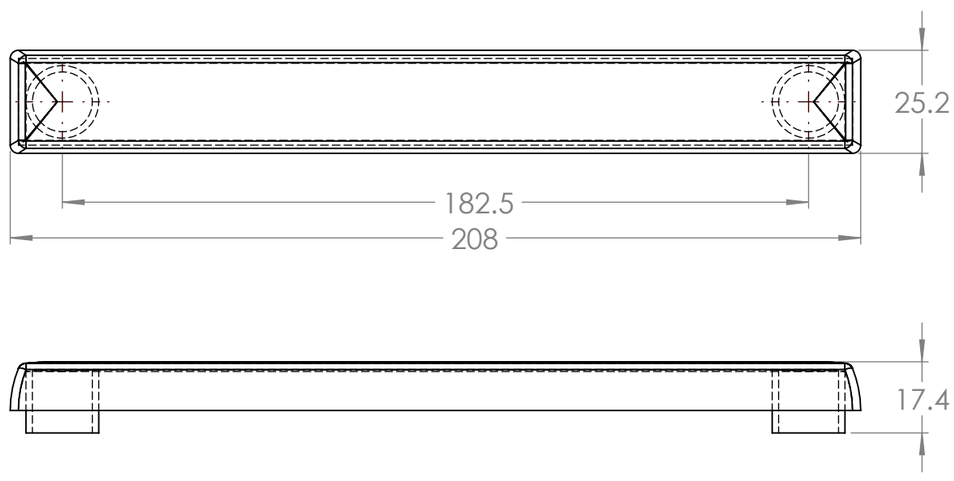

Cover

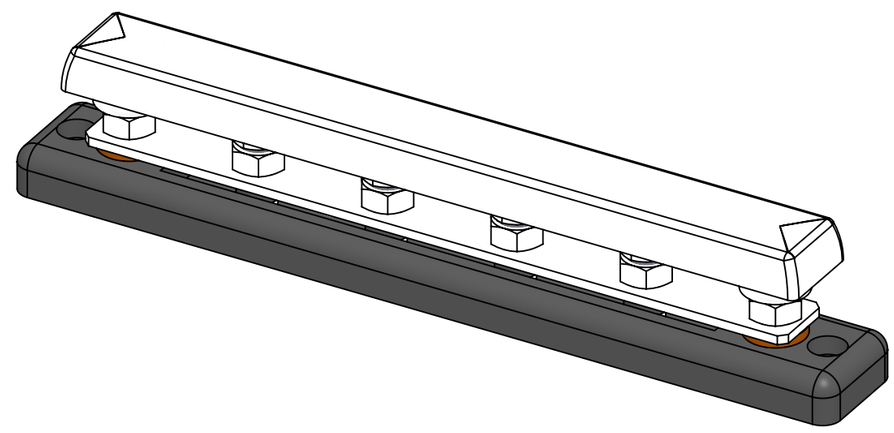

Dimensions in mm

victron energy
BLUE POWER

Rev00